SPECIFICATIONS	
INPUT VOLTAGE	12 VDC - 240 VDC
OUTPUT SPEED	1000 TO 8000 RPM
OUTPUT H.P.	UP TO .75 H.P. CONTINUOUS
LENGTH "L"	5.60 / 8.75
SHAFT DIA. "D"	UP TO ∅1.00
SHAFT EXT. "S"	AS REQUESTED
SHAFT FEATURES	HOB, FLAT, KEYWAY, OR AS REQUESTED
MOUNTING	56 C-FACE MOUNT, FOOT MOUNT
BRUSHES	INTERNAL BRUSH CARD, OR REPLACEABLE BRUSHES
POWER CONNECTION	AS REQUIRED
OUTPUT BEARING	BALL BEARING
VENTING	ENCLOSED / VENTED / FAN COOLED
INSULATION	UL CLASS H

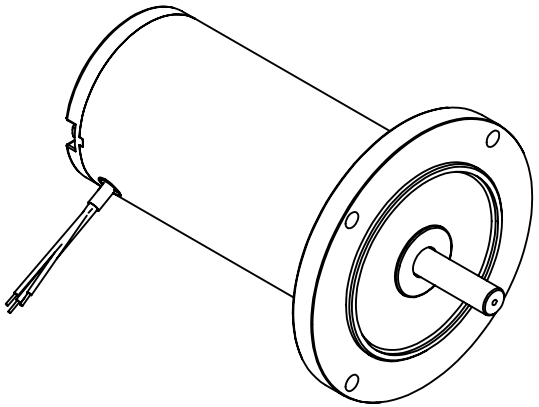

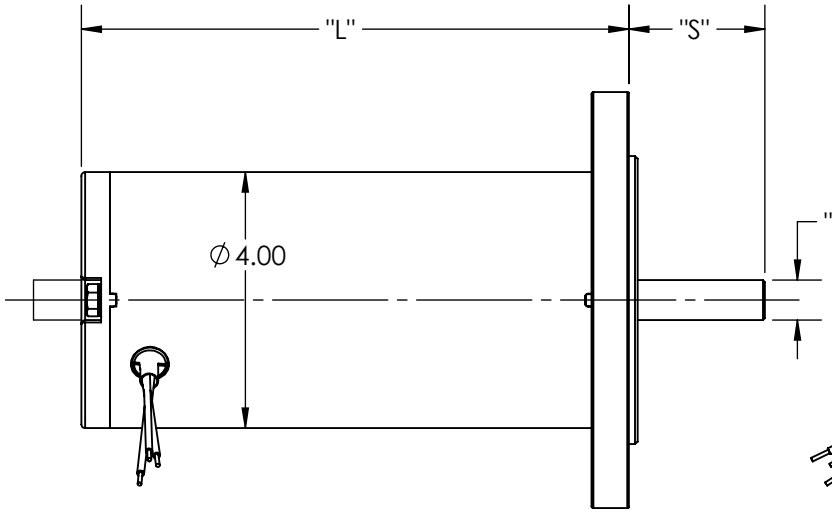

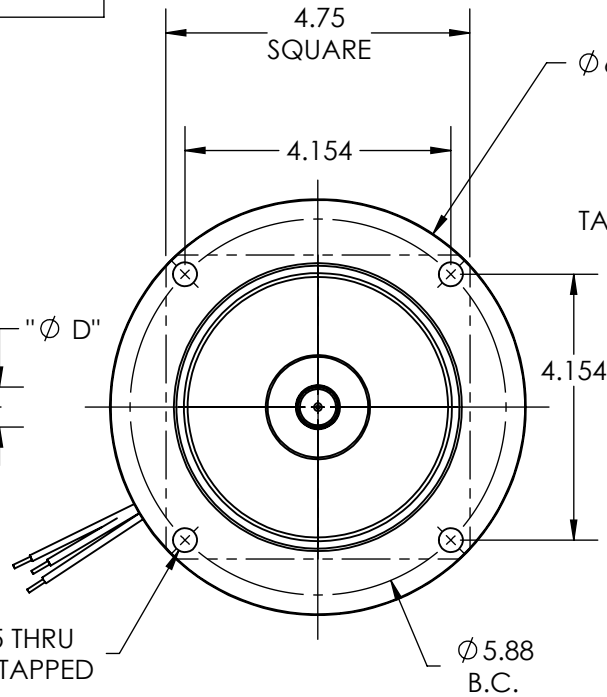

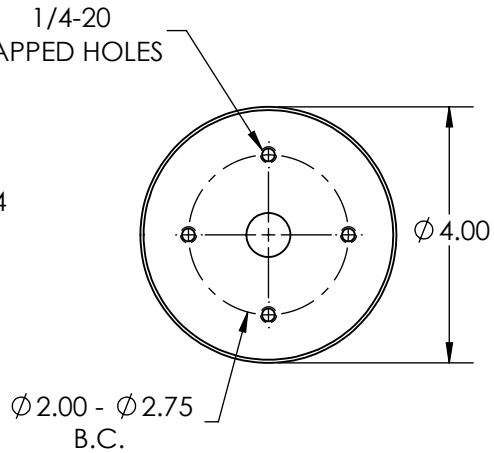

OPTIONAL END HOUSING

REV.	DESCRIPTION	DATE	ECN

DESIGN APPROVAL		DATE
DES. ENG		
MFG. ENG.		
Q.C.		
SALES		

UNSPECIFIED TOLERANCES

.XXX	± .005
.XX	± .015
.X	± .050
ANGLES	± 1°
MACHINE FINISH	.005 TIR
CONCENTRICITY	.001 PER IN.
SQUARENESS	

This Drawing is the property of the Dumore Corporation. It must not be reproduced or copied without written permission.

PART NO. DM40

DUMORE CORPORATION
1030 VETERANS ST. MAUSTON, WI 53948

DO NOT SCALE DRAWING

REMOVE ALL BURRS
BREAK SHARP CORNERS

TITLE
MOTOR ASSEMBLY, DM40

MATERIAL SPEC.

Req. per Piece

Pattern No.

RECEIVED AS

DWG. BY

CKD. BY

DATE

DATE

SCALE 1:3